Honeywell Home

PROSiXCO

Wireless Carbon Monoxide (CO) Detector

Installation and Setup Guide

ATTENTION!

This device is intended for use with Honeywell Home PROSiX™ series control panels. Before installing detectors, please thoroughly read and follow these installation instructions.
NOTE: This document should be kept for future reference.

FEATURES

- 10-year life
- CO Detector End-of-Life reporting (detector needs replacing)
- Carbon Monoxide detector maintenance reporting
- Low Battery Detection
- Multi-color status LED

POWER UP

- Remove battery pull tab. Be sure batteries are seated properly to avoid a low battery condition after 15 seconds
- Upon power up, Green LED Blinks every 2 secs / Sounder is Silent.

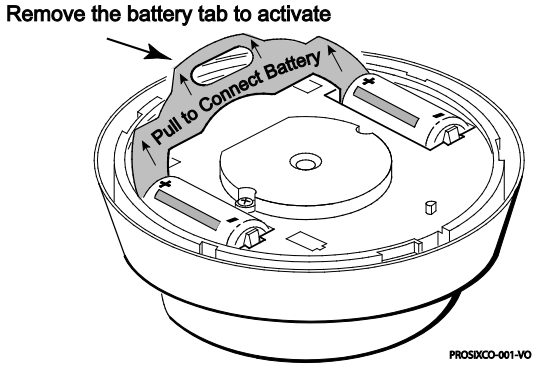

ENROLLMENT

1. Set the Controller in Programming Mode and when prompted:
2. Remove the battery tabs to activate the device and begin the enrollment process.
3. The Green LED flashes rapidly during enrollment (up to about 20 seconds). The detector sends its unique MAC ID (Serial Number) and Services information to the controller.

   ***NOTE:** Enrollment time varies depending on the signal strength between the device and the controller.
4. Enrollment is confirmed after a second trigger, the Green LED turns ON for 3 seconds, and the detector chirps.
5. If the detector is not successfully enrolled during the enrollment period, the LED turns off and the device powers down. Press and release the tamper to retrigger the enrollment (the LED starts flashing fast again).

NOTE: Once enrolled in a system, the PROSiXCO cannot be used with another controller until it is removed from the current controller. See the Controller's instructions for details.

You must enroll the device in the control. Refer to the control's programming instruction for detailed procedures.

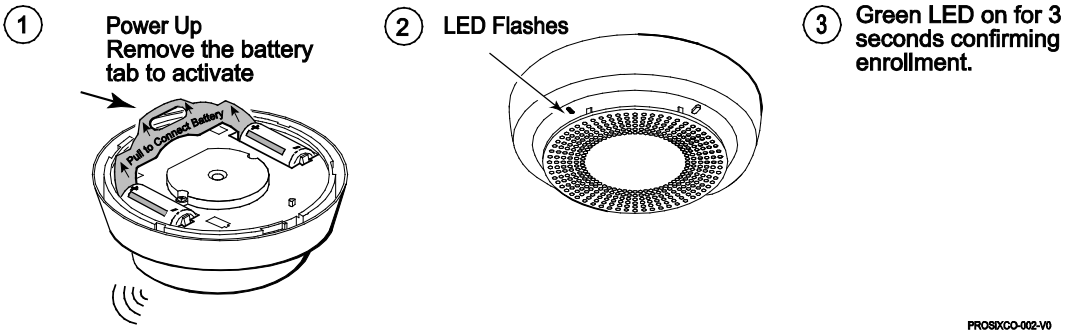

24-HOUR ENROLLMENT DELETION AND DEFAULT

If the device is enrolled in a panel different than the intended panel, and you are unable to delete it from the unintended panel, reset the device to factory default setting:

This procedure is available for 24 hours after enrollment with a panel and the device remains powered (battery installed).

1.Remove power from the detector.
2. Press the CO Test Button.
3. While holding the test button, insert the batteries. Continue holding the test button for 5 seconds and release
4. The status LED should start blinking green rapidly to confirm its deleted enrollment.

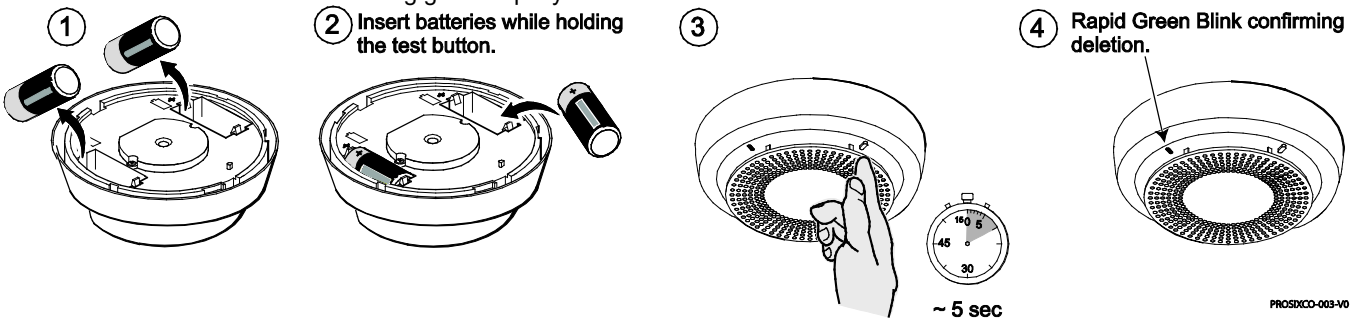

MOUNTING

After enrolling and before mounting permanently, conduct a sensor test (see controller's instructions) to verify adequate signal strength. Adjust the device location as necessary.

1. Remove the CO with a counter-clockwise motion.
2. Using two supplied screws and anchors, mount the base.
3. Attach the CO detector to the mounting base with a clockwise motion.
4. Test each detector as described in the Testing section.
5. Confirm all desired signals have been received by the Central Station.

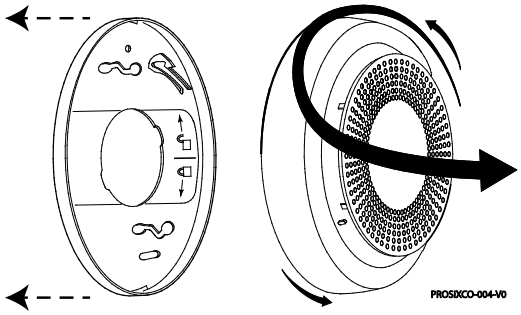

NOTES:

1. NFPA 720 recommends the installation of detectors only after completing construction or any other dust producing activity.
2. This device should not be located within 5 ft. (1.5m) of any cooking appliance.

Ceiling Mount

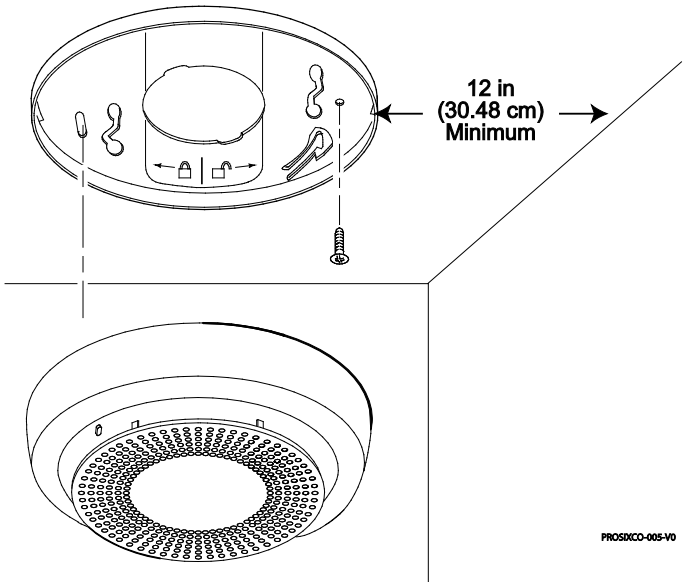

Wall Mount

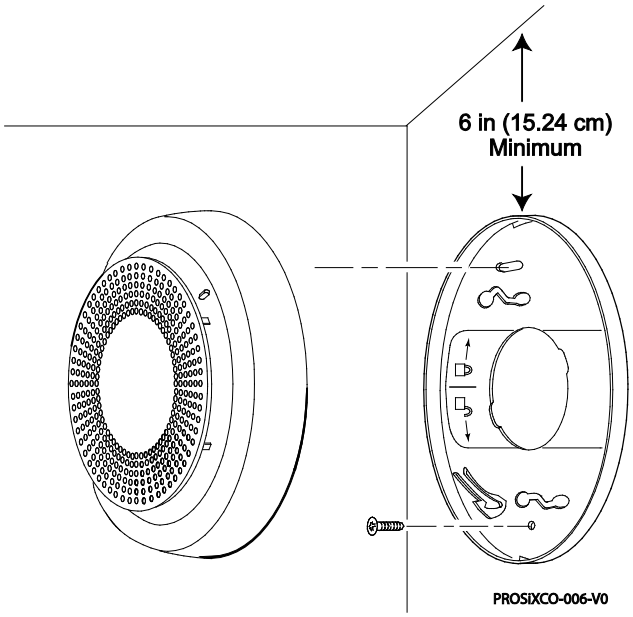

TESTING SIGNAL STRENGTH

Perform this test in accordance with NFPA 72 inspection, testing and maintenance requirements to determine a strong communication path with the control panel.

1. Activate the wireless system's SENSOR TEST mode.
2. Press the detector's TEST button (•) for 1-2 seconds. The detector should immediately transmit an alarm signal to the control panel. The built-in horn will start to sound about 2.5 seconds after pressing the button.
3. The wireless system's keypad should emit at least three beeps when the alarm transmission is received and display the transmitting detector's zone number.
4. When the console has received the test signal, the horn will stop and a few seconds later the detector's zone number will clear from the console display.
5. If the console does not respond as noted, and if this is an initial installation, try moving the detector to another location that provides proper reception. Also, be sure that the detector has been "enrolled" by the controller (see Enrollment section). Then, repeat the test.
6. Turn off the system's TEST mode.

TESTING

Test communications between the detector and the control panel. The detector has one test button (for testing CO).
The detector may also be functionally tested using canned CO. If the detector fails the test method, the detector should be replaced.

NOTES:

- Testing the detector will activate the alarm and send a signal to the panel.
- Before testing, notify the proper authorities to avoid any false alarms.
- This test should be performed to verify a good RF transmission path before mounting the detector at the intended location, and again after the installation is complete.

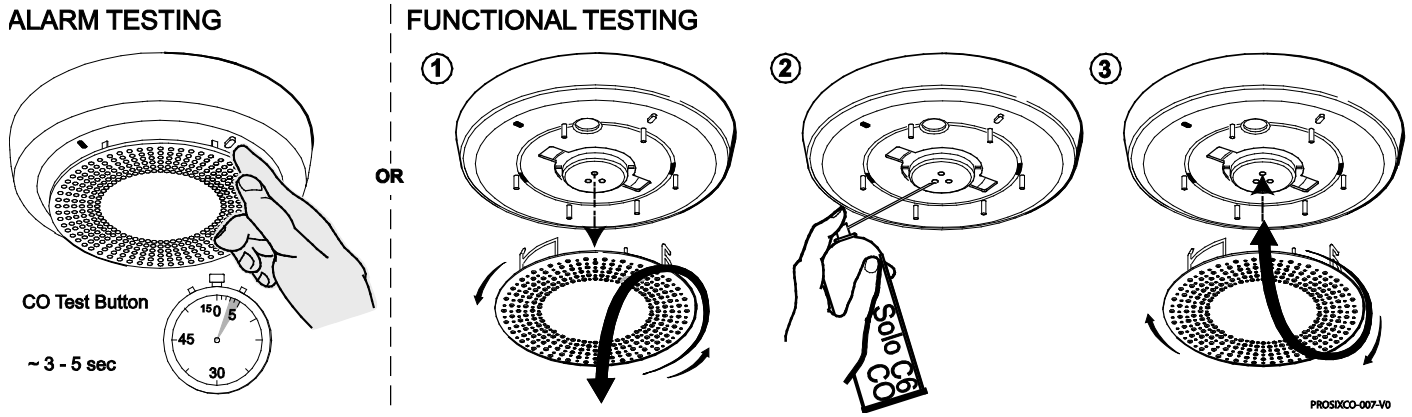

CO TEST (ALARM TEST)

Press and hold the CO Test button for 1 to 2 seconds. The control panel should display and sound a CO alarm (all programmed CO detector loops are sent).

CO SYSTEM TEST (FUNCTIONAL CO TEST)

Press and hold the CO Test button for 3-5 seconds to enter the functional gas test mode. *See Functional Gas Test section below.*

Functional Gas Test

Solo C6 brand canned CO may be used to verify the detector's ability to sense CO by utilizing the RealTest® feature as follows:

1. Remove cover by rotating counter clockwise.
2. Press and hold the CO test button for 3 to 5 seconds. The green LED will start blinking once per second indicating the detector is in RealTest® mode. (If the detector will not go into RealTest® mode, the CO sensor may be in fault or at end-of-life.)
3. While the green LED is blinking once per second, spray a small amount of canned CO directly into the CO entry port.
4. Upon successful gas entry and if functioning properly, the detector will go into CO alarm and send an alarm message to the control panel.
5. The CO test will automatically clear when the CO clears from the sensor or in 30 seconds if no CO was introduced.
6. Reattach the cover to the detector.

HUSH FEATURE / ALARM SILENCE

If required, the audible alarm for CO conditions can be silenced for 5 minutes by pushing the “Test/Hush” button. Does not apply when high levels of CO are detected (>350ppm). In addition, low battery chirping can be silenced for 12 hours when the Test/Hush button is pressed. During a CO alarm, if carbon monoxide is still present after the 5-minute hush period, the alarm will sound.

CO SENSOR END-of-LIFE FEATURE

When the CO sensor has passed end-of-life, a trouble signal is sent to the controller (if programmed). This indicates that the CO sensor inside the detector must be replaced. If unresolved for 30 days, the detector will chirp every 45 seconds. The typical life of the CO sensor is ten years from the date of manufacture. It is recommended to periodically check the “Replace by” date located on the label on the back of the detector head.

CARBON MONOXIDE DETECTOR: EVENTS AND THEIR ID CODES

Event	Alpha Keypad	CS Report
CO Alarm	CO Alarm	CO Alarm (CID 162)
CO Test	CO Alarm	CO alarm (CID 162)
Low Battery	Lo Bat	RF low-battery (CID 384)
Detector Supervision	CO Trouble	RF sensor supervision (CID 381)
Detector End-of-Life/Trouble	CO Trouble	Sensor Trouble - End-of Life (CID 380)
Tamper	Disarmed..... CO Trouble Armed ..... CO Alarm	RF Sensor Tamper (CID 383)

REPLACING THE BATTERIES

Remove old batteries. Wait 10 seconds and then replace with two new batteries. To avoid a low battery indication when installing new batteries, both batteries must be installed within 15 seconds of installing the first one. Any low battery condition that may have occurred should clear when the base plate is installed.

CAUTION!

The batteries used in this device may present a fire or chemical burn hazard if mistreated. Do not recharge, disassemble, heat above 100°C (212°F) or dispose of in fire. Use only Panasonic CR123A OR DURACELL DL123, DL123A Lithium batteries. Use of other batteries may present a risk of fire or explosion. Keep used batteries away from children. Dispose of used batteries properly.

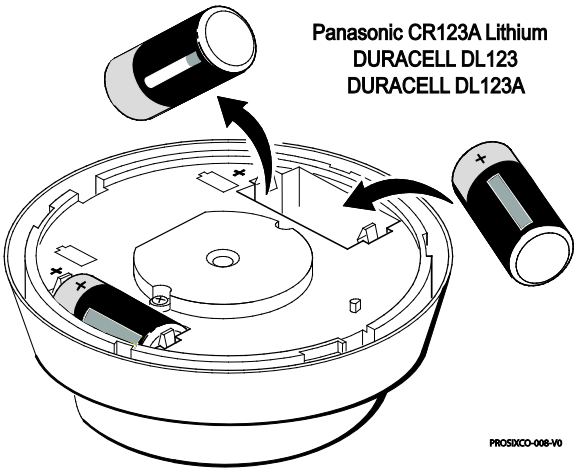

NOTES:

1. Constant exposure to high or low temperature or high humidity may reduce battery life.
2. Batteries available at your local retailer or distribution center.

CLEANING

NOTE: Notify the proper authorities when the system will be temporarily out of service.

IMPORTANT:

This detector must be tested and maintained regularly following NFPA-72 requirements. The detector should be cleaned at least once a year.

1. Remove the detector from the base plate by turning counterclockwise.
2. Clean the outside casing with a cloth. Ensure that the holes on the front of the detector are not blocked with dirt and dust. Canned air can be used to remove any dust or debris.
3. Reattach the detector to the base plate by rotating clockwise.
4. Test the detector to insure it is fully functional. (See Testing section).

Notify the proper authorities and Central Station when the system is back in service.

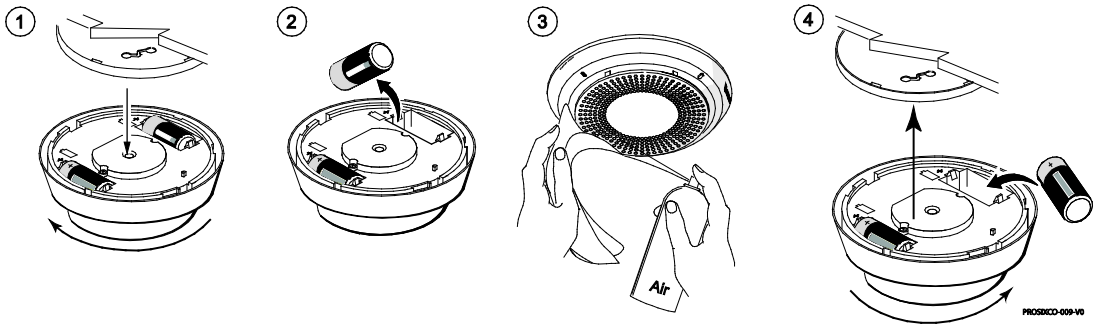

MAINTENANCE

Do not paint, and do not use cleaning agents, bleach or polish the detector.

NOTE: Before performing any maintenance on the detector, notify the proper authorities and Central Station that maintenance is being performed and the system will be temporarily out of service. Disable the zone or system undergoing maintenance to prevent any unwanted alarms. Power must be removed from the detector before performing maintenance of any kind. The PROSiXCO detector reports maintenance issues to the control panel and communicates them visually and audibly per the table below.

TROUBLE FEATURE

When the sensor (supervision) is in a trouble condition (such as CO sensor end-of-life), the detector will send a trouble signal to the control panel. Depending on the issue, the detector must then be serviced or replaced. Please contact your service provider.

NOTE: CO detectors are not to be used with detector guards unless the combination is evaluated and found suitable for that purpose.

LED INDICATORS / LED INDICATORS

Multi-color top LED

Green .....Supervisory indication; blinks during power on, reset, and during normal operation
Amber.....Signal maintenance and trouble events, see table and contact your service provider.
Red.....CO Alarm condition **NOTE:** PROSiXCO beeps four times.

WARNING:

Activation of this device indicates the presence of carbon monoxide (CO) which can KILL YOU. Immediately move to fresh air-outdoors or by an open door or window. Check that all persons are accounted for. Do not re-enter the premises or move away from the open door/window until the emergency service responders have arrived, the premises have been aired out and your alarm remains in its normal condition.

MODE	Status LED (Top)	Sounder
Normal Mode	Blink Green every 10s	N/A
RealTest™ Functional CO gas entry test – *Waiting for gas entry*	Blink Green once per second	Silent
RealTest™ Functional CO gas entry test -*Upon successful gas entry*	Blink Red once every 10 secs	Modified Temp-4
Low Battery	Blink Amber every 45 secs	Chirp every 45 secs (after 7 days)
CO Trouble	Double Blink Amber every 5s	Silent
CO End of Life – *First 29 days*	Double Blink Amber every 3s	Silent
CO End of Life – *after 30 days*	Double Blink Amber every 3s	Chirp every 45 secs
Normal (Standby)	Single Blink Green every 10s	Silent

SPECIFICATIONS

Electrical Specifications

Voltage ..... 3 volts DC
Battery Type ..... Resideo 466, CR123A OR DURACELL DL123, DL123A lithium
Battery Manufacturer ..... Panasonic, DURACELL
Number of Batteries 2
Sensitivity ..... Meets UL2034/UL2075 CO sensitivity requirements
Audible Signal 85dBA

Physical Specifications

Diameter ..... 5.3 inches (13.46cm) Diameter; 1.65 inches (4.19cm) Thick
Weight 7.7oz. (21g)
Operating Temperature ..... 32° – 122° F / 0° – 50° C
Storage Temperature ..... -10 - 70° C (14 - 158° F)
Operating Humidity ..... 20-95% RH
Tamper ..... Wall Tamper

CO ALARM ACTIVATION

Per UL standard 2075, the PROSiXCO detector has been tested to the sensitivity limits defined in UL standard 2034.

CO Alarm Thresholds	
Parts per Million	**Detector Response Time (Minutes)**
30 +/- 3ppm	No alarm within 30 days
70 +/- 5ppm	60 - 240
150 +/- 5ppm	10 - 50
400 +/- 10ppm	4 - 15

REFER TO THE INSTALLATION INSTRUCTIONS FOR THE CONTROL WITH WHICH THIS DEVICE IS USED, FOR DETAILS REGARDING LIMITATIONS OF THE ENTIRE ALARM SYSTEM.

See Resideo Quick Installation Guide (P/N I56-0620-000 (www.resideo.com) and The Limitations of Carbon Monoxide Detectors (P/N K14670V1 4/08 REV B).

LIMITED LIFE OF CO SENSOR

This detector is manufactured with a long-life electrochemical carbon monoxide sensor. Over time the sensor will lose sensitivity and will need to be replaced. The life span of the CO sensor is approximately ten years from the date of manufacture.

Periodically check the detector's replacement date. Remove the detector head and refer to the 'replace by' sticker placed on the underneath side of the detector. The sticker will indicate the date the detector should be replaced.

Reminder:

- This detector is also equipped with a feature that will signal the panel once the CO sensor has passed the end of its' useful life. If this occurs, it is time to replace the detector.

What to do if the detector goes into CO alarm:

If the detector goes into CO alarm (4 beeps), immediately move to a spot where fresh air is available, preferably outdoors, where the air is safe and call your security service provider. Tell your provider the detector alarm status, and that you require professional assistance in ridding your home of the carbon monoxide.

WARNING!
Activation of this device indicates the presence of carbon monoxide (CO) which can KILL YOU.

This detector is NOT:

- A substitute for the proper servicing of fuel-burning appliances or the sweeping of chimneys.
- To be used on an intermittent basis or as a portable alarm for the spillage of combustion products from fuel-burning appliances or chimneys.

Carbon monoxide gas is a highly poisonous gas which is released when fuels are burnt. It is invisible, has no smell and is therefore is impossible to detect with the human senses. Under normal conditions in a room where fuel burning appliances are well maintained and correctly ventilated, the amount of carbon monoxide released into the room by appliances should not be dangerous.

SYMPTOMS OF CARBON MONOXIDE POISONING

Carbon monoxide bonds to the hemoglobin in the blood and reduces the amount of oxygen being circulated in the body. The following symptoms are examples taken from NFPA 720; they represent approximate values for healthy adults.

Many cases of reported carbon monoxide poisoning indicate that while victims are aware that they do not feel well, they become so disoriented that they are unable to save themselves by either exiting the building or calling for assistance. Also, young children, elderly and pets may be the first to be affected. This should be discussed with ALL members of the household.

Exposure	Symptoms
Mild Exposure	Headaches, running nose, sore eyes, often described as 'flu' like symptoms
Medium Exposure	Dizziness, drowsiness, vomiting
Extreme Exposure	Unconsciousness, brain damage, death

CAUTIONS

- This device will only indicate the presence of carbon monoxide gas at the sensor. Carbon monoxide gas may be present in other areas;
- This device is designed to protect individuals from the acute effects of carbon monoxide exposure. It will not fully safeguard individuals with specific medical conditions. If in doubt consult a medical practitioner.
- Installation of the device should not be used as a substitute for proper installation, use, and maintenance of fuel-burning appliances, including appropriate ventilation and exhaust systems.
- This carbon monoxide alarmin device is designed to detect carbon monoxide gas from any source of combustion. It is NOT to detect smoke, fire or other gases.

RF EXPOSURE

Warning – The antenna(s) used for this device must be installed to provide a separation distance of at least 7.8 inches (20 cm) from all persons and must not be co-located or operating in conjunction with any other antenna or transmitter except in accordance with FCC and ISED multi-transmitter product procedures.

Mise en Garde

Exposition aux Fréquences Radio: La/les antenne(s) utilisée(s) pour cet émetteur doit/doivent être installée(s) à une distance de séparation d'au moins 20 cm (7,8 pouces) de toute personne et ne pas être située(s) ni fonctionner parallèlement à tout autre transmetteur ou antenne, excepté en conformité avec les procédures de produit multi transmetteur FCC et ISED.

FEDERAL COMMUNICATIONS COMMISSION (FCC) & INDUSTRY CANADA (IC) STATEMENTS

The user shall not make any changes or modifications to the equipment unless authorized by the Installation Instructions or User's Manual. Unauthorized changes or modifications could void the user's authority to operate the equipment.

CLASS B DIGITAL DEVICE STATEMENT

This equipment has been tested to FCC requirements and has been found acceptable for use. The FCC requires the following statement for your information:

This equipment generates and uses radio frequency energy and if not installed and used properly, that is, in strict accordance with the manufacturer's instructions, may cause interference to radio and television reception. It has been type tested and found to comply with the limits for a Class B computing device in accordance with the specifications in Part 15 of FCC Rules, which are designed to provide reasonable protection against such interference in a residential installation. However, there is no guarantee that interference will not occur in a particular installation. If this equipment does cause interference to radio or television reception, which can be determined by turning the equipment off and on, the user is encouraged to try to correct the interference by one or more of the following measures:

- If using an indoor antenna, replace it with a quality outdoor antenna.
- Reorient the receiving antenna until interference is reduced or eliminated.
- Move the radio or television receiver away from the receiver/control.
- Move the antenna leads away from any wire runs to the receiver/control.
- Plug the receiver/control into a different outlet so that it and the radio or television receiver are on different branch circuits.
- Consult the dealer or an experienced radio/TV technician for help.

INDUSTRY CANADA CLASS B STATEMENT

This Class B digital apparatus complies with Canadian ICES-003.

Cet appareil numérique de la classe B est conforme à la norme NMB-003 du Canada.

FCC / IC STATEMENT

This device complies with Part 15 of the FCC Rules, and Industry Canada's license-exempt RSSs. Operation is subject to the following two conditions: (1) This device may not cause harmful interference, and (2) This device must accept any interference received, including interference that may cause undesired operation.

Cet appareil est conforme à la partie 15 des règles de la FCC et exempt de licence RSS d'Industrie Canada. Son fonctionnement est soumis aux conditions suivantes: (1) Cet appareil ne doit pas causer d'interférences nuisibles. (2) Cet appareil doit accepter toute interférence reçue y compris les interférences causant une réception indésirable.

Approval Listings / Approbations homologations

FCC/IC

Conforms to UL Std. 2075

Other Standards

RoHS

Responsible Party / Issuer of Supplier's Declaration of Conformity: Ademco Inc., a subsidiary of Resideo Technologies, Inc., 2 Corporate Center Drive., Melville, NY 11747, Ph: 516-577-2000

The product should not be disposed of with other household waste. Check for the nearest authorized collection centers or authorized recyclers. The correct disposal of end-of-life equipment will help prevent potential negative consequences for the environment and human health.

Any attempt to reverse-engineer this device by decoding proprietary protocols, de-compiling firmware, or any similar actions is strictly prohibited.

SUPPORT & WARRANTY INFORMATION

For the latest documentation and support, please go to:
www.resideo.com

For the latest warranty information, please go to:
www.security.honeywellhome.com/warranty

The Honeywell Home Trademark is used under license from Honeywell International Inc.
This product is manufactured by Resideo Technologies, Inc.and its affiliates.

resideo

2 Corporate Center Drive, Suite 100
P.O. Box 9040, Melville, NY 11747
© 2020 Resideo Technologies, Inc.
www.resideo.com

800-25216B 7/19 Rev B